OSCAR™ USER's MANUAL

DATABAR CORPORATION

OSCAR™

OPTICAL SCANNING READER
FOR PROGRAMMING HOME COMPUTERS

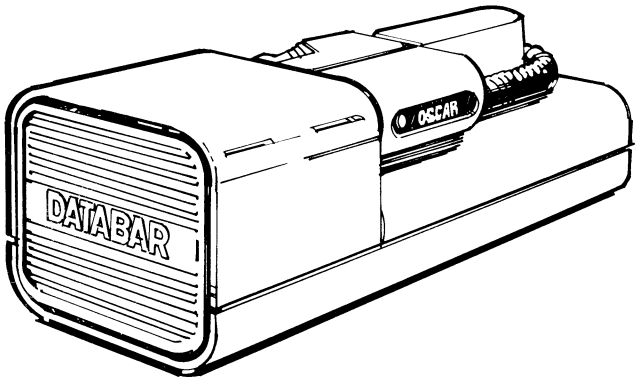

USER's MANUAL

CAUTION

Even though your DATABAR OSCAR™ has been designed for use with batteries and is electrically safe, do not attempt to repair it yourself as you may damage vital electronic components. If you have technical problems which are not covered in this manual, call your DATABAR dealer, authorized repair station or DATABAR Customer Service at 800-672-2776.

WARNING

DO NOT EXPOSE THIS EQUIPMENT TO MOISTURE. SUCH EXPOSURE COULD CAUSE PERMANENT DAMAGE.

FEDERAL COMMUNICATIONS COMMISSION RULES

This equipment generates and uses radio frequency energy. If it is not properly installed and used in strict accordance with the manufacturer's instructions, this equipment may interfere with radio and television reception. This machine has been tested and found to comply with the limits for a Class B computing device in accordance with the specifications in Subpart J of Part 15 of the FCC Rules, which are designed to provide reasonable protection against such interference in a residential installation. If you suspect interference, you can test this equipment by turning it off and on. If you determine that there is interference with radio or television reception, try one or more of the following measures to correct it:

- reorient the receiving antennna
- move the computer and OSCAR™ away from the receiver that is picking up interference
- change the relative positions of the computer equipment and the receiver
- plug the computer and OSCAR™ into a different outlet so that the computer and the receiver are on different branch circuits.

If necessary, consult your DATABAR dealer or call DATABAR Customer Service for additional suggestions. You may also wish to consult the following booklet, which was prepared by the Federal Communications Commission: "How to Identify and Resolve Radio-TV Interference Problems." This booklet is available from the US Government Printing Office, Washington, D.C. 20402, Stock No. 004-000-00345-4.

INTRODUCING OSCAR™

GENERAL DESCRIPTION:

OSCAR™ is a low cost, high-speed optical scanner for use as an input device for most popular home computers. It requires no special adaptors, peripheral expansion modules or other high-cost interface hardware. It is fully supported with an extensive library of BASIC programs which are published in bar code form in the monthly DATABAR magazine or which are supplied individually to retail stores. OSCAR™ overcomes the time-consuming use of the keyboard for entering programs. A typical program can be entered, error-free, in a few minutes. High quality materials and workmanship, combined with a rugged reliable design, insure long-life and error-free use. OSCAR™ adds a new dimension to the term "user-friendly."

Please read this brief manual carefully before you try to use OSCAR™ This manual shows you how to connect OSCAR™ to your particular home computer and how to use OSCAR™ properly. The few extra minutes you spend reading this manual before using OSCAR™ will prove to be well worth the time and effort.

Please be sure to heed any warnings in this manual and do NOT remove the case or otherwise attempt to service OSCAR™. If you have problems with OSCAR™ that are not covered in this manual, see your DATABAR dealer or authorized service station or call DATABAR Customer Service at 800-672-2776.

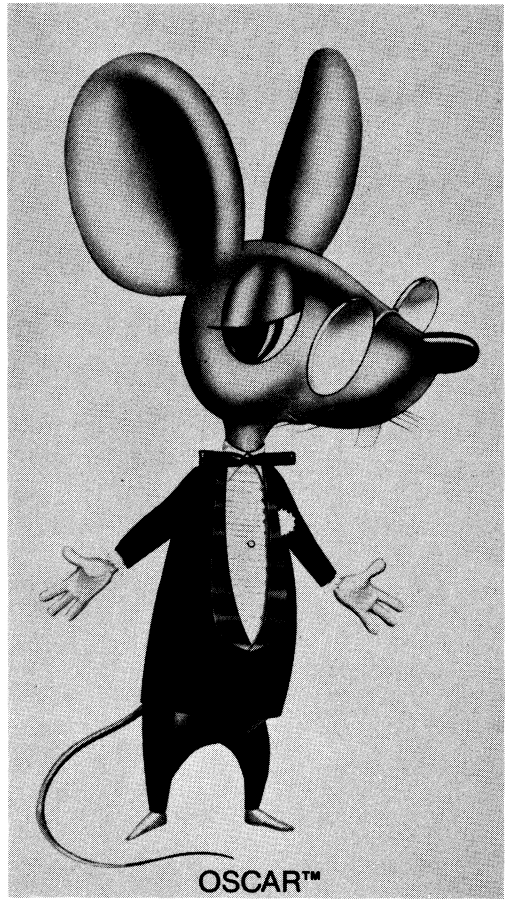

OSCAR's COMPONENTS

OSCAR™ is a system consisting of an optical reader (sometimes called a "wand"), a computer-based processor (which contains the systems power supply), a connecting cable and a template. (See photo)

OSCAR™ is designed to read programs or data, printed in bar code form (similar to the bar code you are familiar with when you pass by your supermarket checkout counter) and transfer them to your home computer.

OSCAR™ connects to the cassette input jack on your home computer and can be thought of as a replacement for the cassette recorder.

DATABAR™ Corporation publishes a monthly magazine containing eight different software series each and every month. In addition, individual software packages may be purchased inexpensively at your favorite retail store.

OSCAR's template provides an easy method for guiding the optical reader over the printed pages of bar code, increasing the users speed and reducing errors.

OSCAR™ System Components

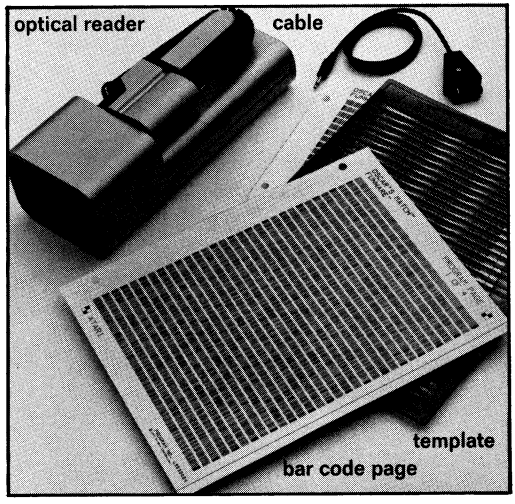

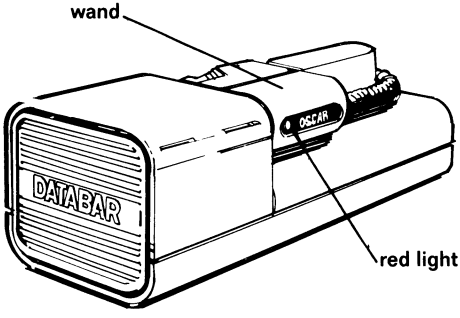

OSCAR™ Front

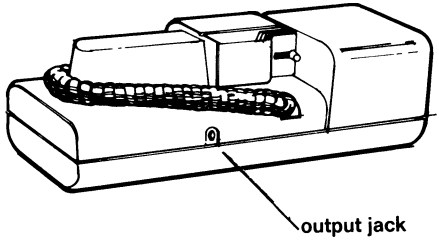

OSCAR™ Back

INSTALLING BATTERIES

OSCAR™ uses 4-"D" batteries available at almost all food, drug, hardware, department and discount stores. We recommend alkaline type batteries for longest life. DO NOT USE rechargeable (NICAD) batteries in OSCAR™. OSCAR™ will not function properly if rechargeable batteries are used.

To install batteries, follow the simple step-by-step instructions below:

1. Remove cover by inserting coin in slot on bottom.

2. Remove plastic cover.

3. Insert batteries according to label on inside of battery cover.

4. Replace plastic cover starting from the top.

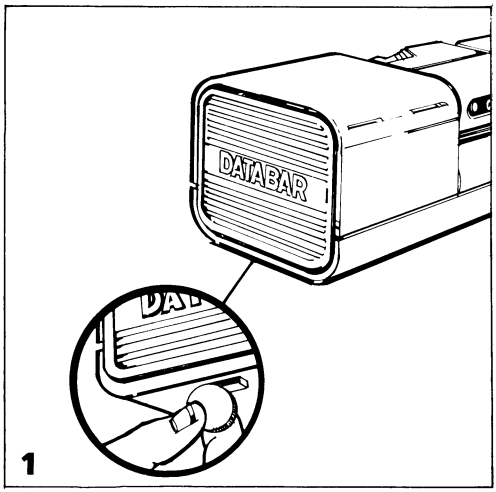

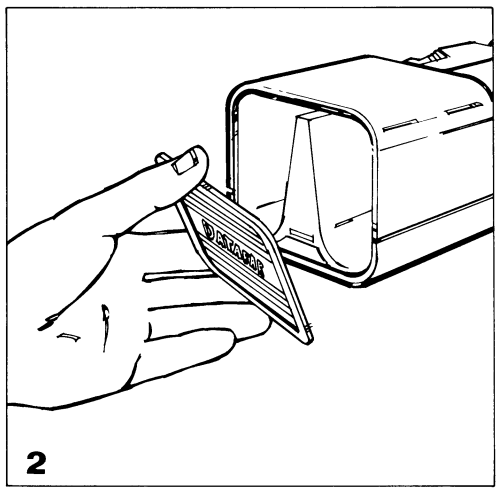

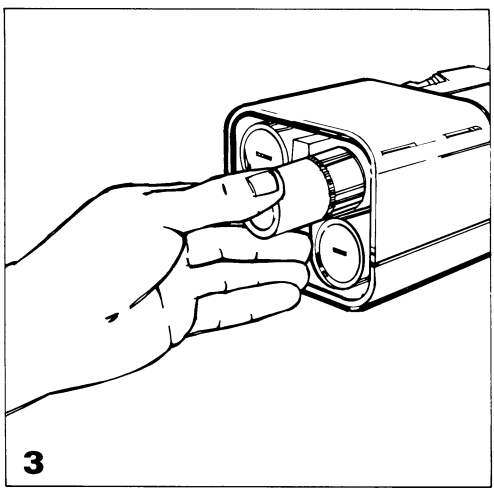

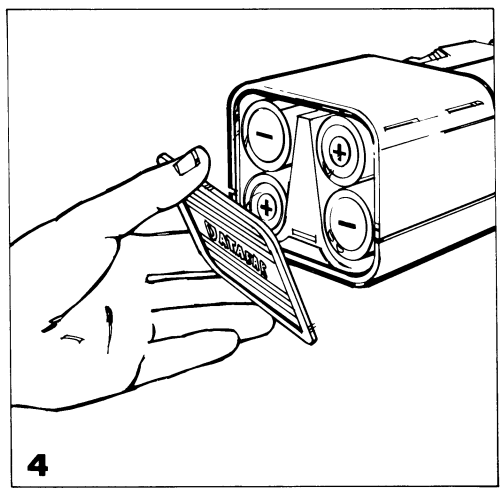

CONNECTING OSCAR™ TO YOUR COMPUTER

The connecting cable allows OSCAR™ to communicate with your home computer. Before you connect the cable, turn off the power to your home computer.

As you look at the cable you will note that one end of the cable has a single large pin. This pin should be inserted in the output jack on the back of OSCAR™. (Ill. 1)

The other end of the cable contains a connector with several small pins protected by a metal or plastic collar. This connector is plugged into the cassette input jack of your home computer.

For further information, refer to the instructions in the computer users manual for attaching a cassette recorder to your computer.

To connect the cable, follow the simple instructions below for your computer.

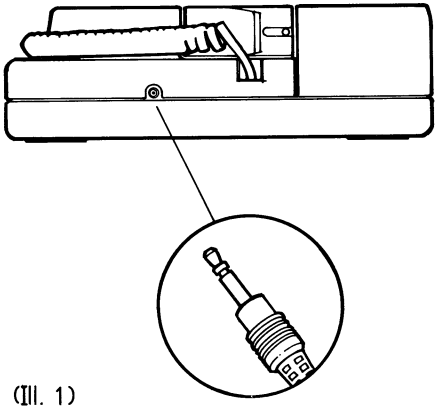

(Ill. 1)

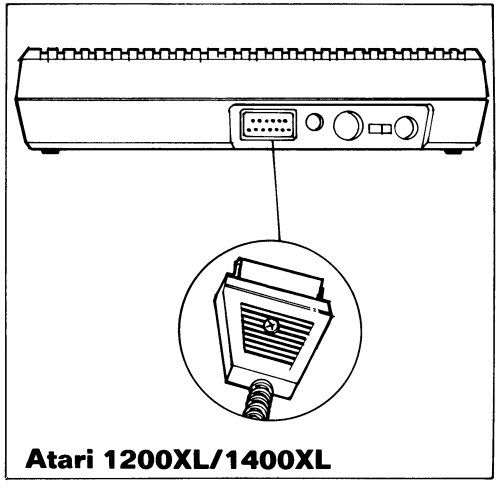

Atari 1200XL/1400XL

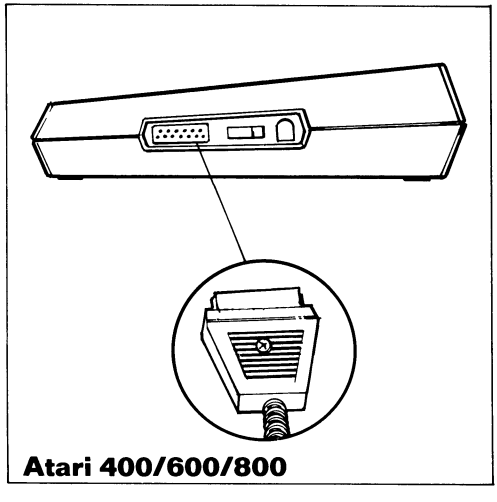

Atari 400/600/800

INSTALLING BATTERIES

OSCAR™ uses 4-"D" batteries available at almost all food, drug, hardware, department and discount stores. We recommend alkaline type batteries for longest life. DO NOT USE rechargeable (NICAD) batteries in OSCAR™. OSCAR™ will not function properly if rechargeable batteries are used.

To install batteries, follow the simple step-by-step instructions below:

1. Remove cover by inserting coin in slot on bottom.

2. Remove plastic cover.

3. Insert batteries according to label on inside of battery cover.

4. Replace plastic cover starting from the top.

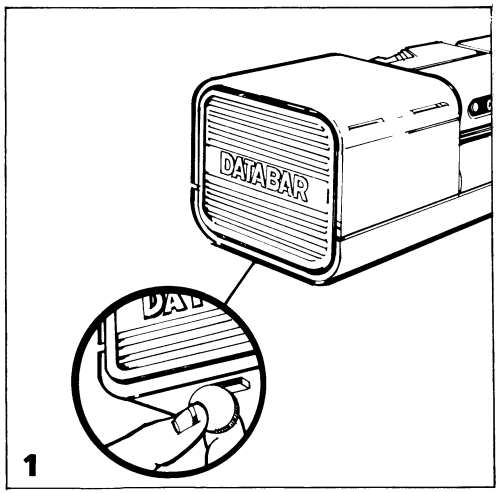

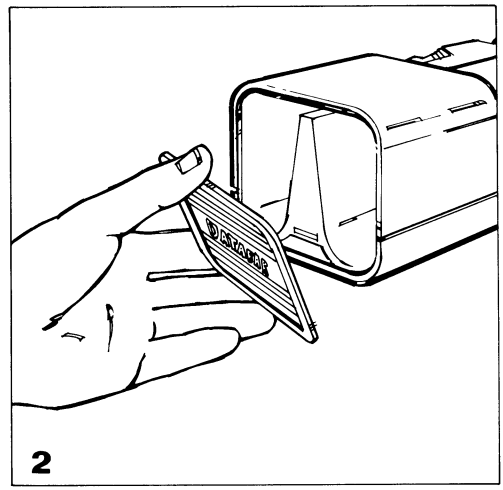

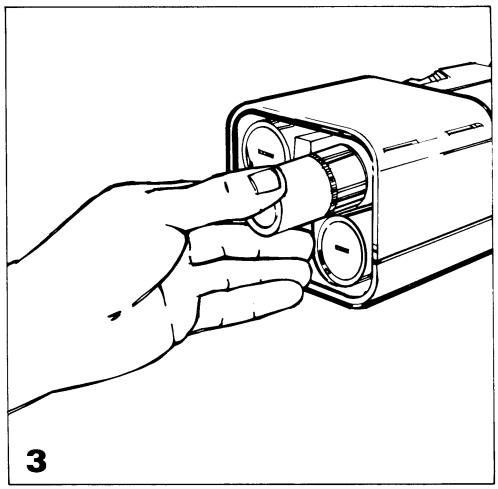

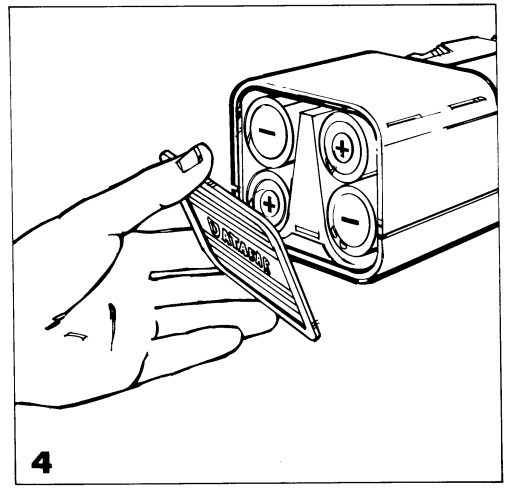

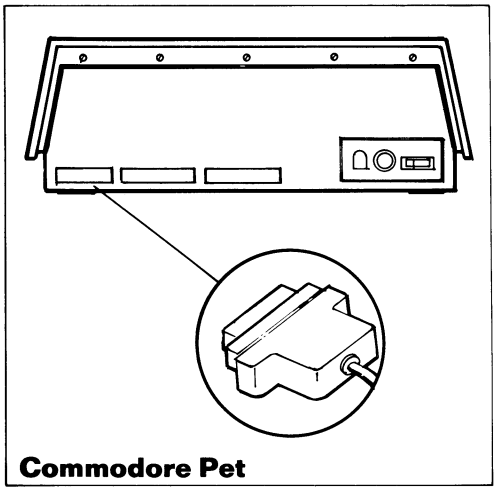

Commodore Pet

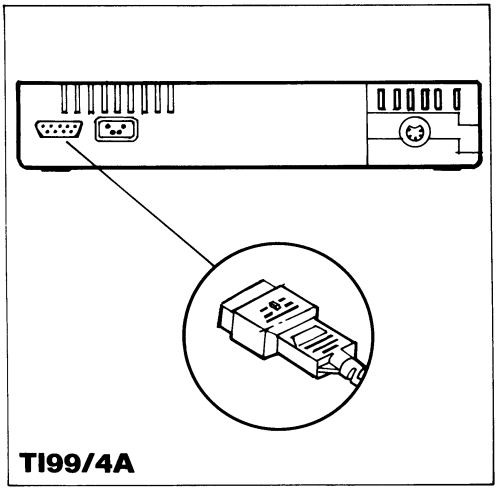

TI99/4A

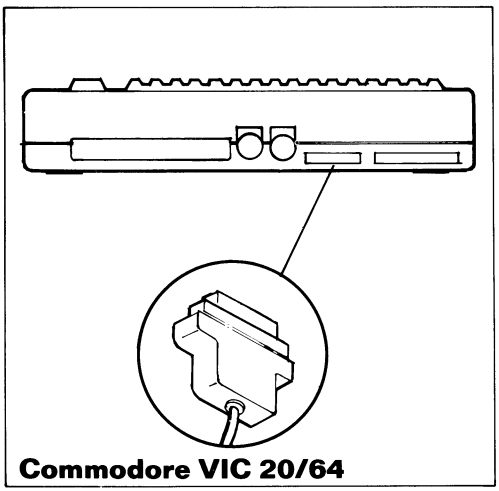

Commodore VIC 20/64

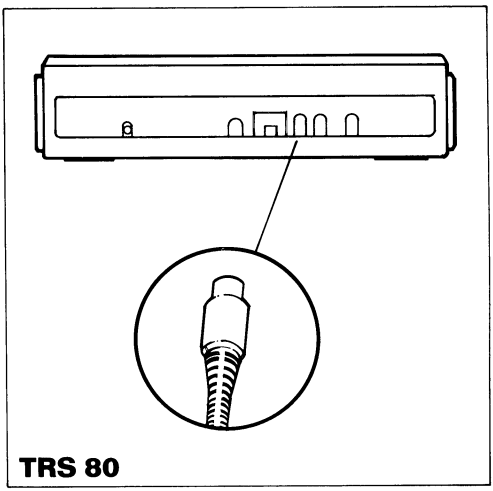

TRS 80

PREPARING FOR USE

Make certain your home computer is properly set up by following the instructions supplied by the computer manufacturer. Power up your home computer by turning on the power switch.

If your brand of home computer requires a BASIC cartridge for interpreting programs, be sure the BASIC cartridge is inserted in the cartridge port.

Make sure your home computer is on a solid surface and positioned to allow room for OSCAR™, a bar coded program and its template.

Place the page of bar code in a comfortable position for scanning. If you are right handed, place OSCAR™ on your right. If you are left handed, place OSCAR™ on your left.

Place the template over the page of bar code and align the targets on the template over the targets printed on the page (upper right and lower left corner of page).

Remove OSCAR's reader from its cradle and place the tip of OSCAR's reader in the first slot in the template over the white space to the left of the first line.

You will note that a red light in the top of the reader will glow when the reader is removed from its cradle. This tells you that the reader is turned on and its batteries are charged.

Make certain you align the grooves in the base of the reader so they engage the slots in the template.

Now you are ready to load a program or data into your home computer. It's as simple as that!

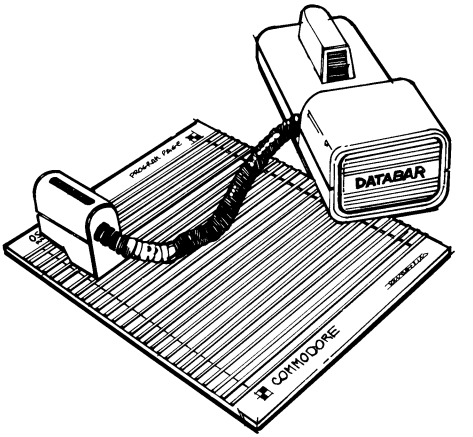

USING OSCAR™

GENERAL:

OSCAR™ will tell you to start reading by signaling you with a high pitched tone.

Make certain the tip of the reader is in the slot in the template touching the paper. (Note: OSCAR's tip is spring loaded and will remain in contact with the paper as long as you hold it lightly against the template.) DO NOT RAISE THE READER OFF THE TEMPLATE WHILE SCANNING THE LINE. THIS WILL CAUSE AN ERROR AND YOU WILL HAVE TO READ THE LINE AGAIN.

Move the reader smoothly across the line of bar code. Try to maintain a constant speed as you move across the line. Avoid a jerky or stop-and-start motion; this will cause erroneous results. The secret of using OSCAR™ is a smooth hand motion.

Most first-time users of OSCAR™ attempt to go very slowly. This is not necessary. In fact, OSCAR™ can read at incredible speeds; as fast as 10 inches per second!

After a little practice, you will find that you can move smoothly across a line of bar code at a very high speed. Remember, keep your hand motion SMOOTH.

When you reach the end of a line AND HAVE READ IT SUCCESSFULLY, OSCAR™ will signal you with a high-pitched tone. Immediately following that high-pitched tone, OSCAR™ will prompt you to read the next line by generating a second high-pitched tone. This second high-pitched tone is referred to as an "ENTER NEXT LINE" prompt.

The end of a line is marked by a heavy black bar; the beginning of a line by a white space.

There is a line number recorded in bar code at the beginning of each line. OSCAR™ uses this line number to make certain you read each line in sequence and don't skip a line.

If you hear a low pitched ("buzz") tone from OSCAR™, you may have read a character incorrectly. To correct a reading error, slide the reader back to the beginning of the line and read the line again. (Note: When sliding the reader back over the line you will hear another "buzz" tone.) That's all there is to correcting an error with OSCAR™!

Possible causes for a "buzz" tone (error) from OSCAR™ are:

1. Not scanning smoothly across a line.
2. Skipping a line.
3. Stopping in the middle of a line.
4. Reading a line backwards. (You must start reading in the white space and end past the black space.)
5. Reading the line too slowly (less than one inch per second).
6. Damaged bar code (scratched, folded or marred).

Damaged programs may be replaced by purchasing individual software packages at your favorite retail store. If your retailer is out of stock you may order direct from DATABAR Corporation by calling our Customer Service Department at 800-672-2776.

The plastic template has line numbers embossed at the beginning and end of each line. When you change lines, it is a good idea to mentally note the number of the last line you read. If OSCAR™ gives you an error prompt ("buzz") which you can't correct by scanning the line again, check the line number you are on to see if it is the next line in sequence. If not, move the reader to the proper line and commence reading.

When you have successfully read a line and receive the "END OF LINE" prompt, lift the reader slightly and slide it directly down to the next line. Position the reader lightly against the template and read the next line.

Reading a page of bar code is like following a maze; you scan from left to right, then slide down and scan from right to left. You alternate the direction of scanning on each line until all lines are read.

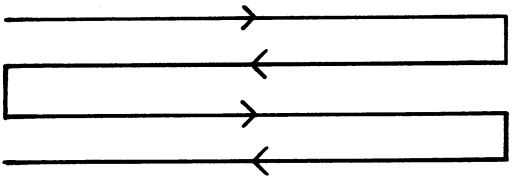

Occasionally you will hear an "END OF LINE" prompt and then OSCAR™ will delay issuing the "ENTER NEXT LINE" prompt. This delay means OSCAR's memory is full and its contents must be transferred to your computer before continuing. When this occurs, wait until you hear the "ENTER NEXT LINE" prompt before scanning the next line. This delay will last only a few seconds.

OSCAR™ contains a unique feature called "time-out". If you stop scanning prior to the end of a program (or data) OSCAR™ will wait 30 seconds and then signal you with a long, high-pitched tone. This tone is a warning that OSCAR™ will automatically shut itself off in another 30 seconds unless you begin scanning again. If you fail to scan a line within 60 seconds, OSCAR™ will shut off automatically to conserve batteries. If "time-out" occurs, you must return OSCAR™ to its cradle prior to restarting the system. If "time-out" occurs because you stopped scanning in the middle of a program or data, you will have to start scanning from the beginning of the program or data (after returning OSCAR™ to its cradle). The purpose of the "time-out" feature is to conserve battery power when not in use.

SPECIFIC OPERATING INSTRUCTIONS FOR YOUR COMPUTER

The first line of bar code you will scan when reading a DATABAR™ program into your home computer is called a "control array". This "control array" tells OSCAR™ which computer it is communicating with and establishes certain logic and format requirements.

1. After successfully reading the first line of bar code, you must enter the same command you would enter to load a program from cassette. Follow the instructions below for your specific computer.

(COPY WHICH APPEARS IN WHITE IS DISPLAYED ON SCREEN).

TEXAS INSTRUMENTS 99/4A

READY - PRESS ANY KEY TO BEGIN

Press any key

PRESS 1 FOR TI BASIC

Press 1

TI BASIC READY

Type OLD CS1

REWIND CASSETTE PLAY CS1 THEN PRESS ENTER

Press ENTER

PRESS CASSETTE PLAY CS1 THEN PRESS ENTER

Press ENTER

READING

IMPORTANT

You will note that OSCAR's™ wand has a groove in each side. This groove not only makes OSCAR™ easy to hold but also allows the wand to "snap" firmly in place over the raised portion of the cradle when not in use.

When you return OSCAR™ to its cradle, make certain you align the groove in the wand over the raised portion of the cradle and snap it into place. This action depresses the microswitch which turns OSCAR™ off.

If you fail to snap the wand firmly into place, the "timeout" feature will turn OSCAR™ off but the unit will not turn on again when you remove the wand from its cradle for its next use. If this occurs, depress the microswitch with your finger and the unit will immediately turn on.

ATARI

READY

Type ENTER "C and press CARRIAGE RETURN

curser returns and a beep is generated

Press CARRIAGE RETURN AGAIN

no change but another beep is generated

RADIO SHACK

OK

Type CLOAD and press CARRIAGE RETURN

S appears in the upper left corner of the screen

NOTE: The Radio Shack computer will print an (F) on the screen when the program is being read in.

COMMODORE 64/VIC 20*

Type LOAD "",1,1 and press CARRIAGE RETURN

screen blanks

COMMODORE PET*

Type LOAD and press CARRIAGE RETURN

SEARCHING

*For Commodore computers only, some additional instructions must be entered after OSCAR transmits the first time. This transmission occurs after the reading of the second line of bar code. The instructions are:

64	PET/VIC 20
FOUND	**SEARCHING**

Press space bar (only necessary on older 64's)

screen blanks	no change

READY	**READY**

Type SYS260 and press CARRIAGE RETURN

071,1,0:s/291	071,1,0:S291

Press CARRIAGE RETURN

screen blanks	**SEARCHING**

After typing the second CARRIAGE RETURN, continue to read lines of barcode following OSCAR'S™ prompts until the following screen indication:

FOUND	**FOUND**

Press space bar (only necessary on older 64's)

screen blanks	no change

2. After you have entered the command specific to your computer, continue to read lines of bar code following OSCAR'S™ prompts.

3. After every so many lines of bar code (the number varies between computers), OSCAR™ will transmit to the target computer. You will usually get an audio or visual indication of this from your computer:

Radio Shack
Block in top left corner shifts from black to white

TI
Audio tones

Commodore
Screen blinks (VIC 20 and PET — no indication)

Atari
Audio tones

Timeouts: The Atari and Texas Instruments computers have some limits which set the maximum time they will wait for transmission to their cassette ports. For Atari you must read 3 lines of bar code in 35 seconds. For Texas Instruments, you must read 2 lines of bar code in 25 seconds.

4. When you have read the last line of code, OSCAR™ will generate the "TRANSMISSION COMPLETE" prompt followed by an "ENTER NEXT LINE" prompt. At this point your computer will display the following:

TRS 80 Color Computer

```
OK
```

All Commodores

```
READY
```

All Ataris

```
READY
```

TI 99/4A

```
*DATA OK
*PRESS CASSETTE STOP CS1
THEN PRESS ENTER.
```

For the TI 99/4A Press ENTER as instructed, then type RUN and press the ENTER key when the prompt character is printed.

For all the other computers, type RUN (carriage return) to start your program.

IN CASE OF DIFFICULTY

ERROR MESSAGES:

If the solutions below do not work call DATABAR Customer Service at 800-672-2776.

COMPUTER: ATARI
MESSAGE: ERROR 138
POSSIBLE SOLUTION:
This is a timeout error. You must read 3 lines of bar code in less than 35 seconds. This time also includes changing pages. If OSCAR™ is not connected you will also get this error.

COMPUTER: ATARI
MESSAGE: ERROR 143
POSSIBLE SOLUTION:
This is also a time related message. Re-enter your program reading a little faster.

COMPUTER: TEXAS INSTRUMENTS
MESSAGE: NO DATA FOUND
POSSIBLE SOLUTION:
You have 25 seconds to read 2 lines of bar code for transmission into the TI. Make sure you read the first line of bar code before entering the load commands into your computer.

GENERAL PROBLEMS:

– You do not get the indicated response from the computer as OSCAR™ transmits.
  This is probably due to not plugging OSCAR™ into your computer.

– Syntax ERRORS.
  This is caused by not typing the commands EXACTLY as described in the operation section.

ATARI

– Not getting a tone indication as OSCAR™ is transmitting.
  You didn't enter a carriage return twice after typing ENTER "C.
  Your volume control on the T.V. is not turned up high enough.

TEXAS INSTRUMENTS

– Not getting a tone indication as OSCAR™ is transmitting.
  Your volume control on the T.V. is not turned up high enough.

COMMODORE VIC 20/64

– "PRESS PLAY ON TAPE" appears after typing load command on computer.
  OSCAR™ is not plugged into the computer.

COMMODORE PET

– "PRESS PLAY ON TAPE" appears after typing load command on computer.
  OSCAR™ is not plugged into the computer.

PROBLEMS WITH OSCAR™:

- OSCAR™ generates a buzz followed by an "ENTER NEXT LINE" prompt immediately after you take the wand from its cradle.
  OSCAR™ has examined himself and determined that something is wrong. You should take him to your dealer or authorized service station for repair or replacement.
- OSCAR™ generates a buzz followed by a high tone and immediately turns himself off. (Red light goes out.)
  OSCAR™ is telling you that your batteries need to be replaced.

- OSCAR™ always buzzes when trying to read a line of bar code.
  Possible causes for this problem are:
  1. You are reading the line too fast or too slow. (You have from 1 to 7 seconds to read each line of bar code.)
  2. You did not scan the line at a constant speed.
  3. The bar code you are reading has been scratched, folded, or marred. Try moving the template down or up slightly and read the line again.
  4. You may be reading the line backwards. You should start at the end of the line opposite the large black bar and read towards that bar.
  5. You may be reading the wrong line. OSCAR™ requires you to read the lines in order.
  6. You are not starting to scan from the white area in front of the line.
  7. You are not waiting for OSCAR™ to finish prompting you before starting to read the next line.
- You remove the wand from its cradle and the light goes on for a short time and then goes out. OSCAR™ doesn't emit any tones.
  OSCAR'S™ batteries are probably too low to permit OSCAR™ to run at all. Replace the batteries. If the problem still exists take OSCAR™ to your dealer or authorized service station for repair or replacement.

ROUTINE MAINTENANCE

OSCAR™ requires very little attention and is a high quality product in every respect.
The only routine maintenance required is cleaning the tip of the reader and replacing "dead" batteries.

The tip of the reader should be cleaned occasionally by gently swabbing it with alcohol applied with a lint-free cloth. Occasional cleaning will avoid a build-up of ink particles and/or paper dust which can affect performance. Be sure the tip is dry before attempting to use OSCAR™ again. If the tip is not dry the alcohol may damage your bar coded software.

Batteries should last 2 to 6 months or more under normal use and should be changed when OSCAR™ signals you to do so. You will easily recognize OSCAR's low battery signal which is a low-pitched tone followed by a high-pitched tone, lasting about one-half second each. Since OSCAR™ checks for a low battery condition after generating the "ENTER NEXT LINE" prompt you will actually hear "HIGH, BUZZ, HIGH" when a low battery condition is detected. After signalling you, OSCAR™ will shut itself off.

While OSCAR™ will function at extreme temperatures (0°C to 50°C), best results will be achieved by bringing OSCAR™ to normal room temperature after OSCAR™ has been stored in extreme hot or cold conditions.

HELPFUL HINTS

*Make sure you are seated in a comfortable position with OSCAR™ at your left or right depending on whether you are left or right handed.

*The secret of using OSCAR™ is a SMOOTH scanning motion; avoid "jerky" or start-and-stop motions.

*Wait for the "ENTER NEXT LINE" prompt before scanning.

*Be sure to return OSCAR™ to its cradle after reading a program or data.

*Change batteries when OSCAR™ signals you to do so.

*Do not touch the tip of OSCAR's reader with your fingers.

*Handle your bar code pages with care. Return them to your DATABAR™ Software binder when not in use.

*Look for other great DATABAR™ programs at your favorite retail store.

*If you have technical problems which are not covered in this manual, call your DATABAR dealer, authorized service station or DATABAR Customer Service at 800-672-2776.

THE TWO COMPUTER FAMILY

Keep this instruction booklet in a safe place. You never know when you'll become a two computer family!

Since OSCAR™ works with most popular home and personal computers, if you do become a two computer family you need only go to your favorite retail store to purchase a different cable to connect OSCAR™ to your second computer. Note: This is only necessary if your second computer is a different brand than your first computer. If you own a Commodore™, your cable will connect OSCAR™ to any Commodore™; If you own an ATARI, your cable will connect OSCAR™ to any ATARI; etc.

OSCAR's ability to communicate with a large number of machines is a plus for the two computer family!

Complete DATABAR™ Software series.

FUNWARE™
Exciting but non-violent games for family members of all ages like checkers, mazes, bridges, go fish, OSCAR's Adventure and more! (An excellent way to teach your child to use a keyboard while having fun.)

SCIENCEWARE™
Provides useful math/science programs that you can put to use right away for home improvement projects, sports and hobbies, home electronics, photography and more!

WORDWARE™
Offers a wide range of language-skill services. Including: how to write effective resumes and business letters, how to get more out of your reading, how to improve your vocabulary, and other relevant subjects.

CLASSWARE™
Familiarizes the child with computers while reinforcing school activities for grades kindergarten through six. Subjects covered include addition, subtraction, multiplication, division, fractions and forming alphabetical letters.

LEGALWARE™
Informative and practical programs on law and how it relates to everyday life. Programs include legal history, using the court system, selecting an attorney, writing a will, and more.

HEALTHWARE™
A complete array of software programs providing guidance for maintaining family health. Programs include nutrition, health facts, exercise, stop smoking, weight control, and stress reduction.

HOMEWARE™
Improves your family's financial health by providing practical, easy-to-understand information on topics like taxes, inflation, family budgeting, life insurance, savings programs, retirement income, home mortages, educational funding and more.

GENWARE™
This tutoring series is designed to teach the user how to program the computer in BASIC. Includes entering and editing programs, output and input in BASIC, logical expression, loops and practical problems.